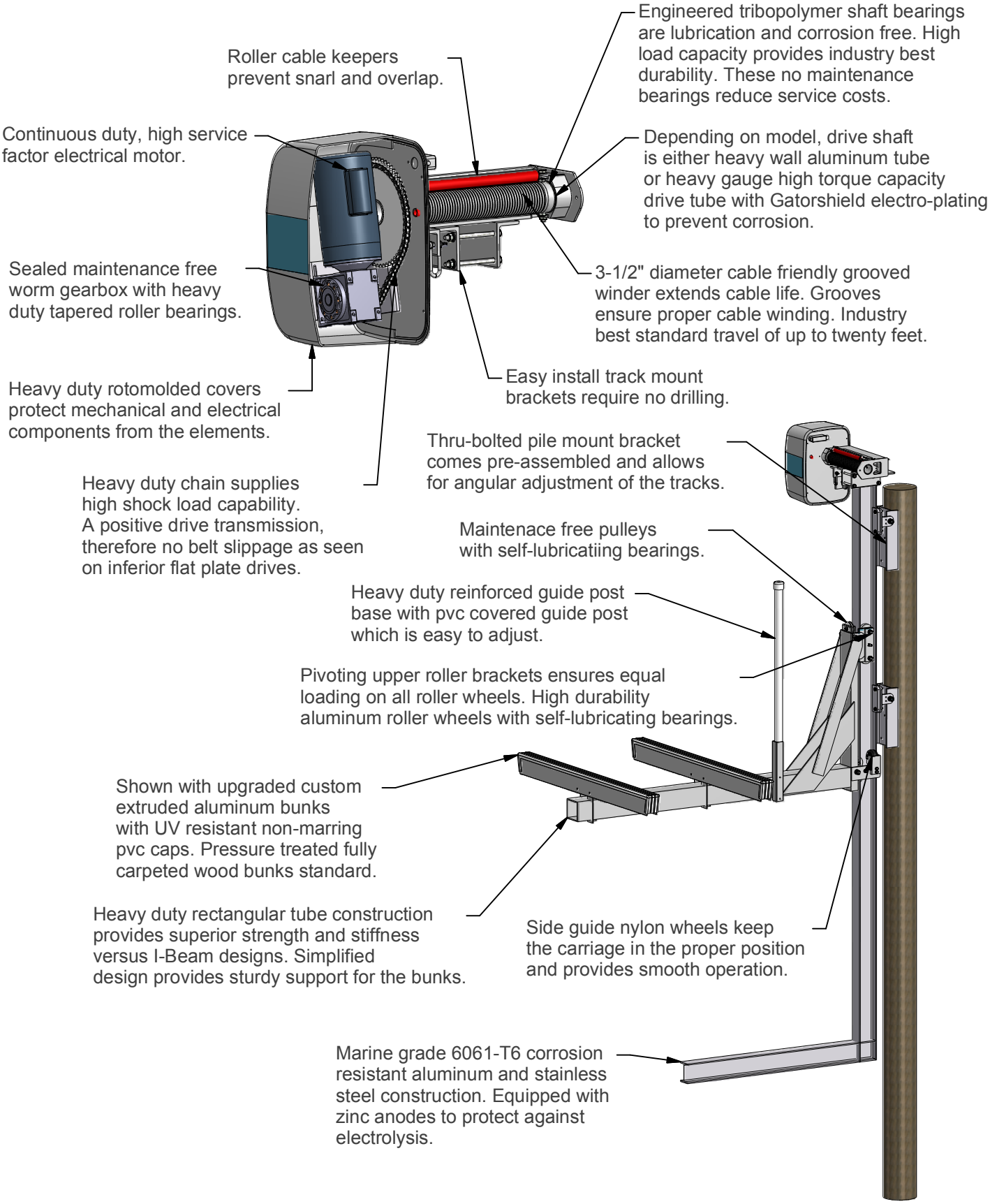
Engineered tribopolymer shaft bearings are lubrication and corrosion free. High load capacity provides industry best durability. These no maintenance bearings reduce service costs.
Roller cable keepers prevent snarl and overlap.
Continuous duty, high service factor electrical motor.
Depending on model, drive shaft is either heavy wall aluminum tube or heavy gauge high torque capacity drive tube with Gatorshield electro-plating to prevent corrosion.
Sealed maintenance free worm gearbox with heavy duty tapered roller bearings.
3-1/2" diameter cable friendly grooved winder extends cable life. Grooves ensure proper cable winding. Industry best standard travel of up to twenty feet.
Easy install track mount brackets require no drilling.
Heavy duty rotomolded covers protect mechanical and electrical components from the elements.
Thru-bolted pile mount bracket comes pre-assembled and allows for angular adjustment of the tracks.
Heavy duty chain supplies high shock load capability. A positive drive transmission, therefore no belt slippage as seen on inferior flat plate drives.
Maintenace free pulleys with self-lubricatiing bearings.
Heavy duty reinforced guide post base with pvc covered guide post which is easy to adjust.
Pivoting upper roller brackets ensures equal loading on all roller wheels. High durability aluminum roller wheels with self-lubricating bearings.
Shown with upgraded custom extruded aluminum bunks with UV resistant non-marring pvc caps. Pressure treated fully carpeted wood bunks standard.
Heavy duty rectangular tube construction provides superior strength and stiffness versus I-Beam designs. Simplified design provides sturdy support for the bunks.
Side guide nylon wheels keep the carriage in the proper position and provides smooth operation.
Marine grade 6061-T6 corrosion resistant aluminum and stainless steel construction. Equipped with zinc anodes to protect against electrolysis.